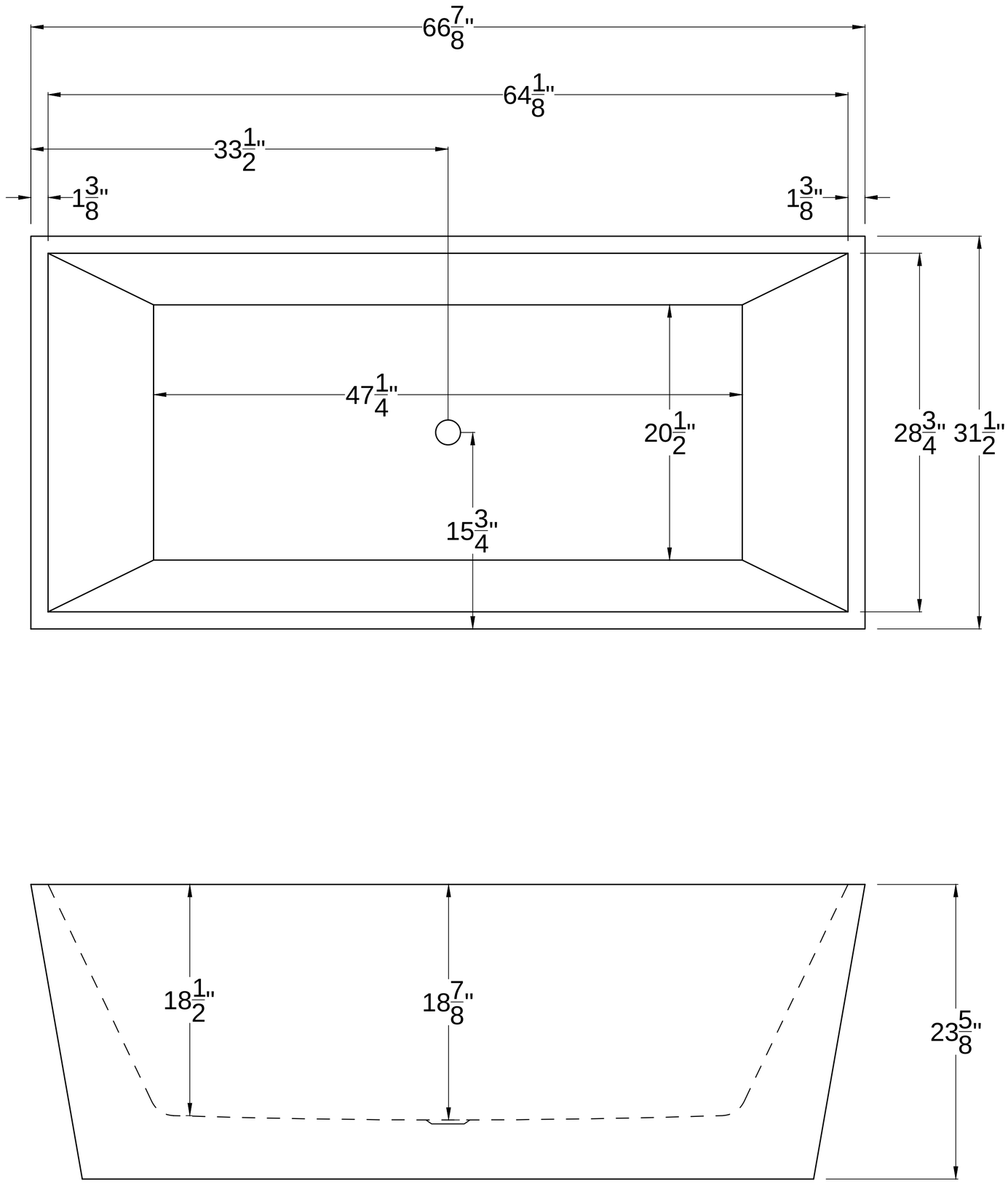
66 7/8"
64 1/8"
33 1/2"
1 3/8"
1 3/8"
47 1/4"
20 1/2"
15 3/4"
28 3/4"
31 1/2"
18 1/2"
18 7/8"
23 5/8"